Advertisement

Design a PIN diode switch for high-linearity applications

AUGUST 11, 2008 < HTTPS://WWW.EDN.COM/DESIGN-A-PIN-DIODE-SWITCH-FOR-HIGH-LINEARITY-APPLICATIONS/>
BY EDN < HTTPS://WWW.EDN.COM/AUTHOR/EDN/>

COMMENTS 0 < HTTPS://WWW.EDN.COM/DESIGN-A-PIN-DIODE-SWITCH-FOR-HIGH-LINEARITY-APPLICATIONS/#RESPOND>

Print PDF

Advertisement

PIN diodes are ideal for transmit-receive (TR) switches because of a favorable blend of cost, size, and switching speed. Although the PIN diode in the transmit (Tx) arm can be connected as either series or shunt switching element, the former is potentially more linear [1]. During transmitting, a series PIN switch is biased ON, whereas a shunt PIN is turned OFF. In the shunt connection, the large RF signal voltage modulates the unbiased PIN diode's junction capacitance due to the varactor effect and this generates significantly more distortion. As a result, series PIN switches are preferred in applications that emphasize linearity.

General RF characteristics of PIN diode

The PIN diode consists of a layer of intrinsic (high resistivity) material of finite area (A) and thickness (W) which is contained between highly doped p and n type material. When the diode is forward biased, charge is injected into the intrinsic or “I” region. This charge consists of holes and electrons which have a finite lifetime before recombination. The density of charge in the intrinsic region and its geometry determines the conductance of the device.

The thickness of the intrinsic region determines the minority carrier lifetime τ. The cutoff frequency (f_C) is related to τ by:

Advertisement

$$f_c = 1/(2\pi\tau).$$

The PIN diode's low frequency limit of useful application is governed by these parameters. Below $10f_C$, the PIN diode behaves like a conventional PN junction; rectifying the applied RF signal and creating copious amount of distortion. However, above $10f_C$, the PIN diode functions like a current controlled resistor; this is where signal can pass through the switch relatively undistorted. The PIN diode described here has τof greater than 200ns and is suitable for use above 10MHz.

Advertisement

PARTNER CONTENT

From AI’s Origins to Smart Devices: <https://www.eetimes.com/from-ais-origins-to-smart-devices-selecting-the-right-devices-for-smart-deployment/> 02.27.2026

GUC Announces Tape-out of UCIe 64G IP on TSMC <https://www.eetimes.com/guc-announces-tape-out-of-ucie-64g-ip-on-tsmc-n3p-technology/> 02.26.2026

Hearing is Believing: The Unsuspected <https://www.eetimes.com/hearing-is-believing-the-unsuspected-key-to-smart-glasses-innovation/> 02.26.2026

The junction resistance, R_S , can be changed from high to low by the application of a forward bias current. The series connected switch has an insertion loss, A, corresponding to [2]:

$$A = 20\log\left(1 + \frac{Rs}{2Zo}\right)$$

The PIN diode switch is more robust and linear than its FET counterpart. The former is able to tolerate switching in the presence of RF power which is also known as “hot-switching,” whereas, the FET switch can be damaged by the transition through a resistance region where significant power is dissipated [3]. Additionally, the PIN diode can handle larger power in the non-conducting state as it has a highest breakdown voltage (V_{BR}) among competing switch technologies. Above 5 to 30MHz, the silicon PIN switch generates less distortion and consequently achieves a higher third order intercept point (IP3)

than FET-based switches [4,5]. Additionally, within the power dissipation limit, the PIN diode's linearity may be raised if so desired by increasing the bias current [6].

Technology	GaAs MESFET	GaAs pHEMT	AlGaN/GaN HEMT	This work (HSMP-386J PIN)
V_{BR} *(V)*	8-12 [7]	20 [7]	80 [7]	100

1. Table 1 Breakdown voltages for various semiconductor switch technologies.

Product design

Microwave PIN diodes have small junction area to minimize parasitics. When a typical SOT-packaged PIN diode is used as a series switch, it can handle about 30 to 37dBm of power. To achieve the targeted +40 dBm power handling, one technique is to combine smaller diodes to form a larger one. This technique requires the diode dices to be well matched to prevent one die from hogging more current than the other.

The traditional method of hand-matching diodes from unrelated wafers (e.g. comparing the forward voltage, V_f , at 1mA of bias current) generally yields inferior results as the DC parameters may have little relation to the RF characteristics. A more production-friendly method involves cutting a diode wafer into arrays of dices. As each array consists of dices from adjacent site, the diodes are well matched in RF characteristic [7]. A QFN package measuring 2 mm on each side was chosen for the following reasons: industry standard footprint, low cost plastic and lead-frame materials, and low thermal resistance (θjc = 45 C/W) due to large center lead. Among competing parts, this design has both the smallest footprint and the lowest thermal resistance for a low cost plastic package. Its thermal resistance only loses out to the more expensive ceramic-packaged parts.

Parameter extraction and model fitting

The model parameters are derived by curve-fitting to the measured insertion loss and isolation in the series switch configuration. The diode model is based the single die version demonstrated by Piper [8] and the initial model parameters taken from published data of this PIN family[9]. The two package dependent parameters, bond-wire inductance (L_{pkg}) and pad-to-pad capacitance (C_{pkg}) were varied to fit the measurement.

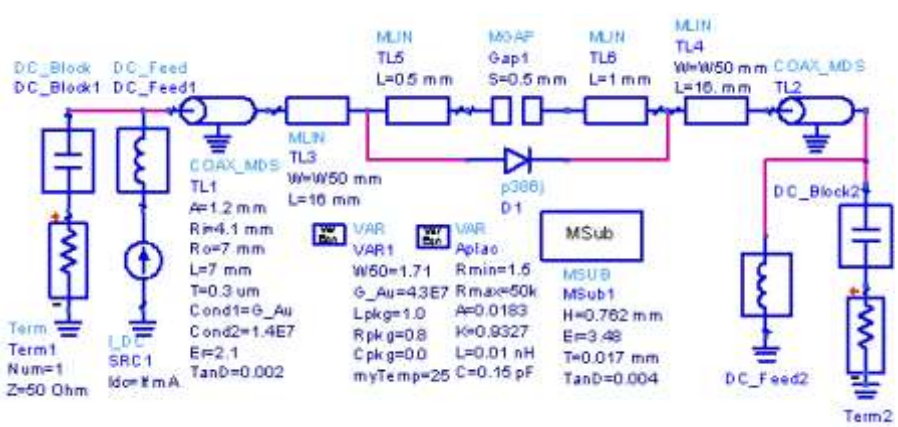

1. Simulation circuit of series switch evaluation board.

The main contributor of insertion loss at low frequencies is the intrinsic layer's finite conductance at rated bias current I_f . However, as the frequency goes up, the PIN's equivalent series inductance (L_{pkg}), consisting of the bond-wire and lead parasitic, becomes increasingly dominant in influencing the switch's loss. For a bond-wire of the length *l* and diameter d (in microns), the inductance (in nH) is:

$$L_{\text{bond-wire}} = 2\times10^{-4}\,\ell\left(\ln\frac{4\ell}{d} + 0.5\frac{d}{\ell} - 1 + \frac{\delta}{d}\right)$$

where δ is skin depth [10]. The package design minimizes L_{pkg} by using a multiplicity of bond-wires and leads for the anode and cathode connections.

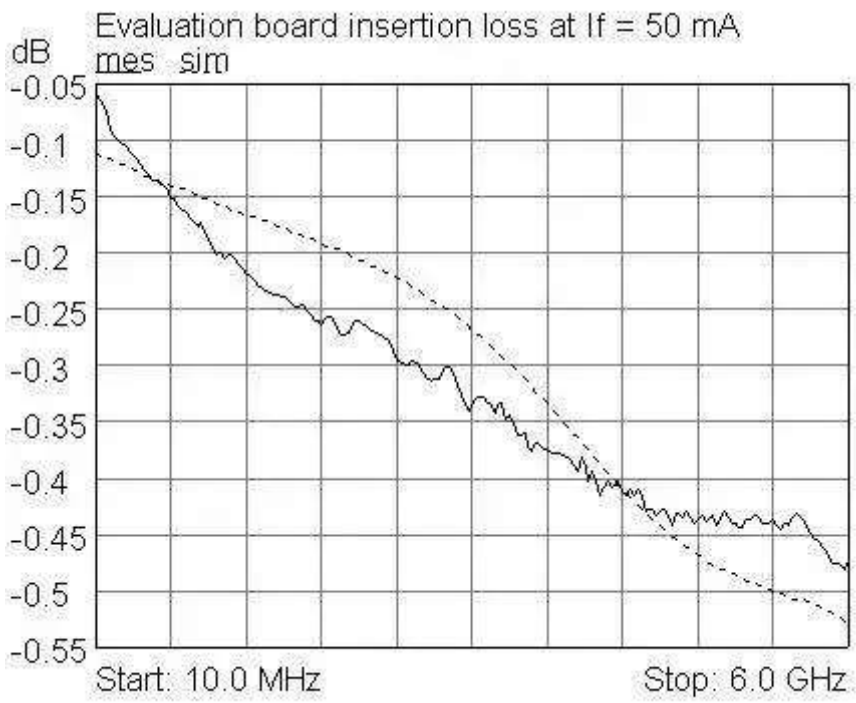

2 Measured and simulated series switch insertion loss at 50mA bias.

Under zero-bias condition, the PIN diode behaves like a fixed value capacitor at frequencies above the dielectric relaxation frequency (≈500 MHz for this device) given by:

$$f_{DR} = 1/2\pi\rho\varepsilon$$

where ρ is the resistivity of the I-region and the dielectric constant of silicon [2]. Since the PIN junction capacitance is proportionate to the junction area A,

$$C_j = \varepsilon A/W,$$

its value will be adversely large in a compound PIN device that was dimensioned for handling large power. On a smaller magnitude is the parasitic capacitance formed of dielectric material (i.e. mold compound) between the opposing lead-frame pads inside the package [11]. The combined package (C_{pkg}) and junction (C_j) capacitances are important considerations in the PIN switch design as they allow the RF signal to leak around the high junction resistance in the unbiased state. This leakage

degrades the isolation of the series switch during the “turned off” mode, causing it to drop at a rate 6dB per octave. Evaluation of the device at zero bias showed that at 4GHz and above, it is totally bereft of any isolation. Fortunately, there is a circuit trick for recovering the lost isolation by resonating out the parasitic capacitances with an external inductor [12] and this is shown in the application example.

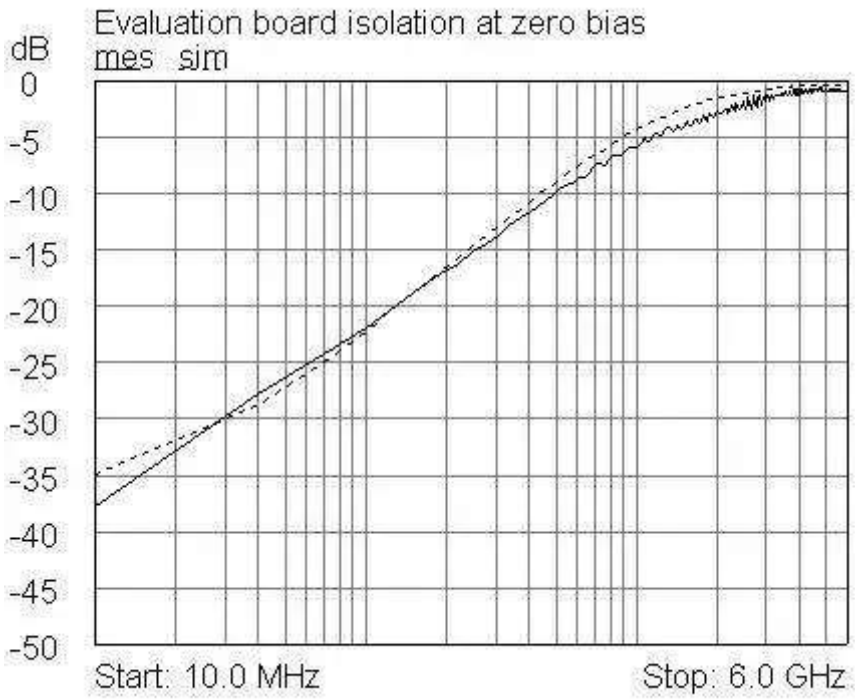

3 Measured and simulated series switch isolation at zero bias.

Other electrical specifications are also measured as part of the characterization process. The ones pertinent to switch operation are tabulated below.

Parameter	*Min.*	*Typ.*	*Max.*	*Test conditions*
Breakdowa voltage V_{BR} (V)	100	-	-	IR ≤ 5 uA
Forward voltage V_F (V)	-	0.85	-	I_F = 50mA
Series resistance Rs (Ω)	-	0.65	0.77	I_F = 50mA, f = 100 MHz
Total capacitance C_T (pF)	-	0.75	1.25	V_R = 50V, f = 1 MHz
Carrier lifetime τ (nS)	-	260	-	I_F = 50 mA, I_R = 100 mA
Reverse recovery time Trr (nS)	-	130	-	V_R = 5V, I_F = 50 mA, 90% recovery

Table 2 Other parameters measured as part of the product characterization.

2GHz resonant switch design example

The characterization results indicate that the device by itself cannot meet the customer's isolation requirement. One circuit trick that can help to improve isolation at higher frequencies is to use an external inductor (L_{res}) to create a parallel resonant circuit with the parasitic capacitance (C_{pkg} & C_j). Such a circuit is known as a resonant switch and is inherently narrow band. Depending on the loaded Q of the parallel resonant circuit, the useful bandwidth is typically limited to 10% of the centre frequency or less. A capacitor (C_{blk}) is added in series to the inductor to prevent shorting of the PIN diode at DC. The value of L_{res} can be approximated from:

$$L_{res} = 1 / ((2\pi f)^2(C_{pkg}+C_j)).$$

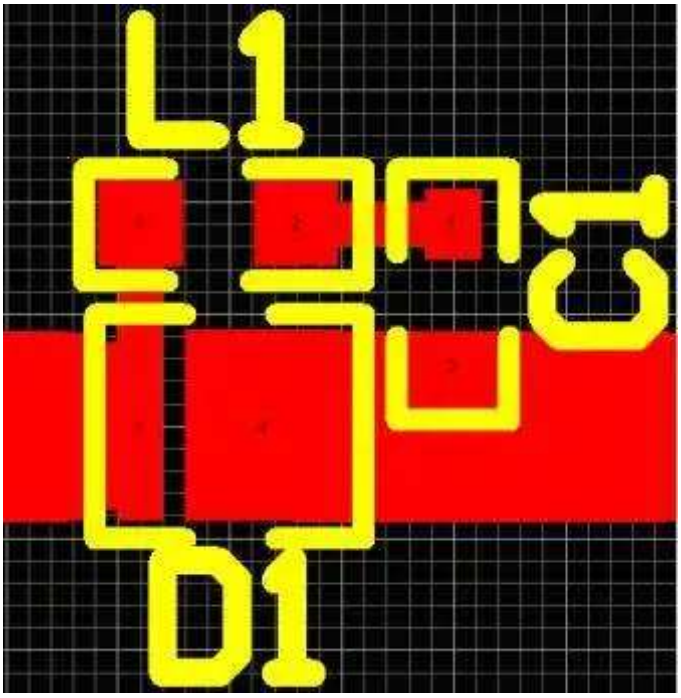

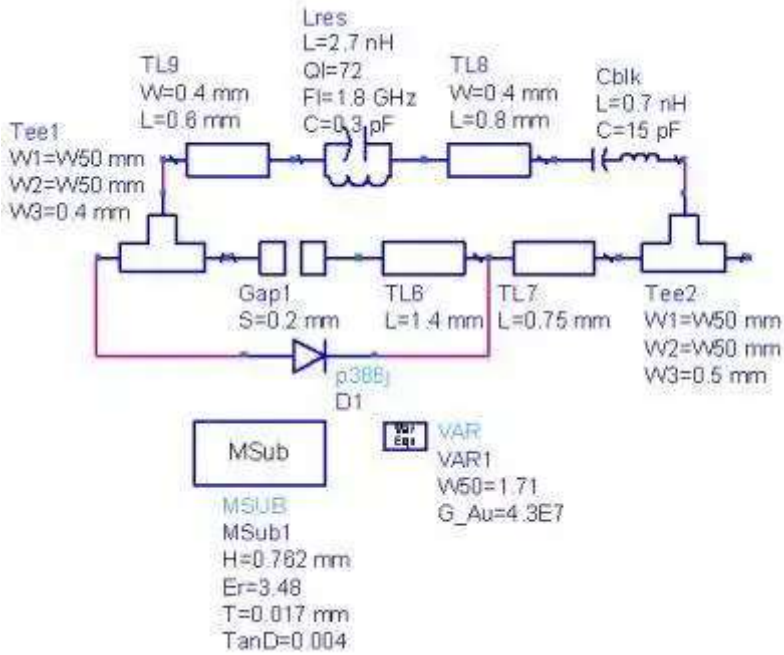

4: PCB layout (top) simulation circuit (bottom) of the 2.0 GHz resonant switch design

The unloaded Q of the chip inductor influences the extent of the isolation improvement. A higher self resonance frequency in the inductor is also important as it portends to a lower parasitic capacitance. Keeping the parallel tank circuit's capacitance to a minimum helps to widen the bandwidth of the resonant dip.

To investigate the isolation improvement that can be realistically expected of a multi-layer inductor, a 2.0GHz resonant switch was simulated based on inductor parameters that are representative of the Toko LL1608 series [13]. A value of 2.7nH resulted in a resonance at the desired frequency and an isolation improvement of approximately 22 dB.

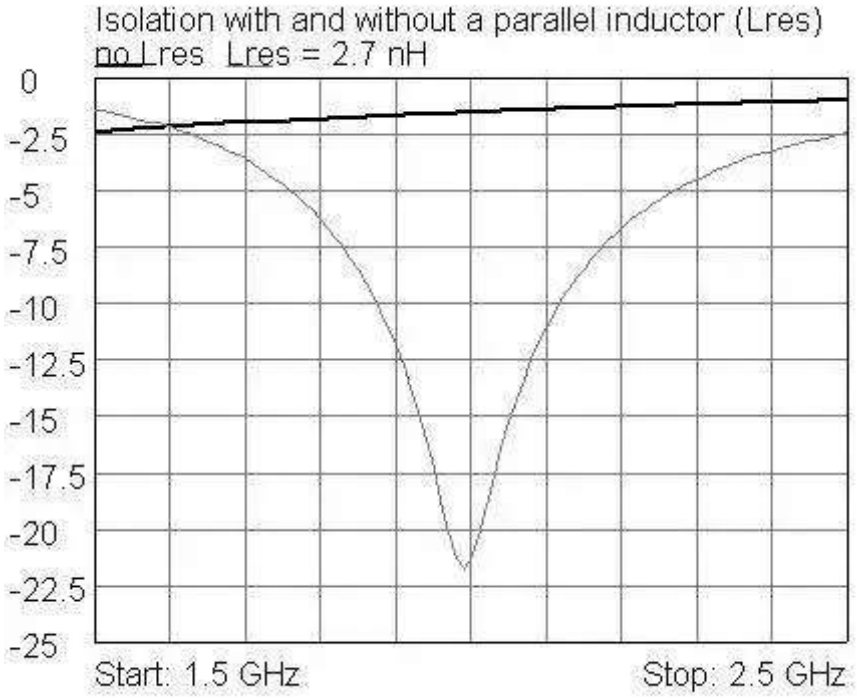

5: Simulated isolation of the 2 GHz switch with and without a parallel inductor (L_{res})

Power Handling

The maximum RF power that a PIN switch can handle is limited by either its breakdown voltage (V_{BR}) or power dissipation (P_{diss}) [14]. When the PIN switch is conducting, the RF power is dissipated as heat in the junction resistance. Continuously operating the PIN diode at junction temperatures (T_j) in excess of 150C will result in a lower mean time to failure [15]. In a 50ohm system, it is this thermal reliability requirement that will cap the PIN's maximum power handling rather than the 100V V_{BR} limit.

The amount of power that can be handled by the PIN switch is much larger than the dissipated power limit. The total power (P_{diss}) dissipated in the PIN diode is the sum of the DC (P_{DC}) and RF (P_{RF}) powers. P_{DC} is the product of the forward voltage (V_f) and the current (I_f). P_{RF} is determined from the difference between the input and output RF power; in this particular case, it is the same as the switch's insertion loss.

The large center paddle at the bottom of the QFN package efficiently carries heat away from the junction to the PCB traces which serve as the heat-sink. As a result, this PIN diode is able to achieve a junction to case thermal resistance (θ_{jc}) of 45 C/W. Other parameters specific to the application, such as ambient temperature (Ta) and case (lead) to ambient thermal resistance (θ_{ca}), also have a bearing on the maximum power handling. θ_{ca} can be reduced by using thicker copper cladding (e.g. 1 oz. instead of 0.5 oz.) and wider micro-strip trace. The interaction between the environmental conditions and power handling was evaluated with the device thermal calculator in AppCad [16].

Based on the following set of environmental conditions: ambient temperature of 25 C, case to ambient thermal resistance of 22 C/W and insertion loss of 0.2 dB (nominal at 2.0 GHz), the T_j was calculated for various power levels. Accordingly, this device will breach the maximum temperature limit at 40W (46 dBm).

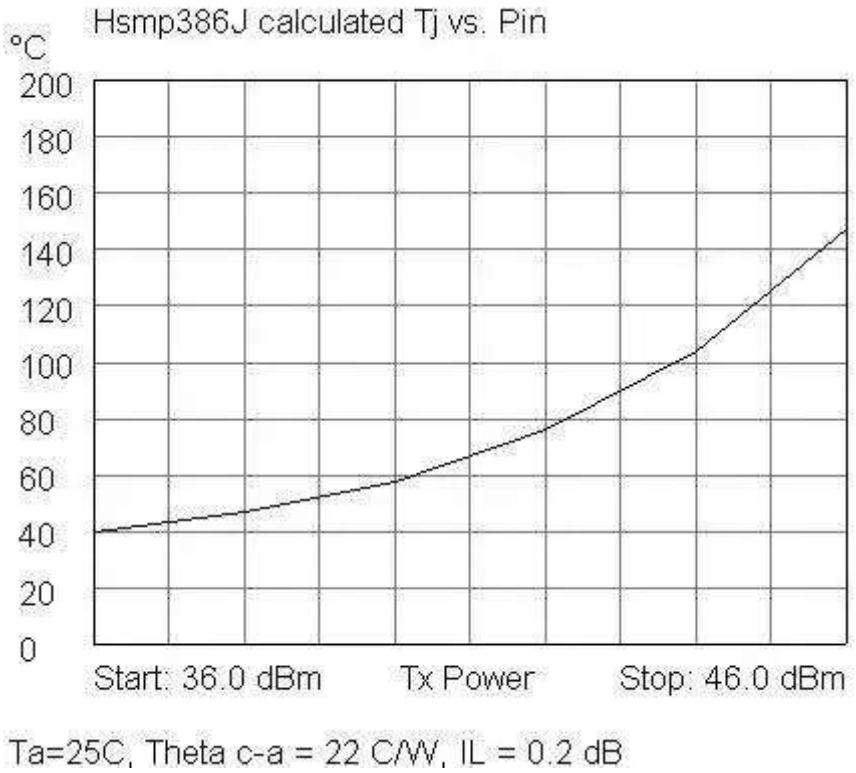

6 T_J vs. transmit power

The described device fulfils the requirement for a high power PIN diode in a small, inexpensive package possessing good thermal characteristics. It is capable of switching +40 dBm of RF power when paired with a PCB design of sufficient heat-sinking capability. The evaluation results showed the viability of using this part as a Tx switch for 2.0 GHz cellular base-stations.

Acknowledgement

The author thanks L.Y. Goh, C. H. Soon, J. Ang, and, S.A. Asrul for their help in the product characterization and project leadership.

About the Author

Chin Leong Lim received his B.Tech. degree in electrical engineering from Universiti Teknologi Malaysia in 1990. As a novice engineer in Robert Bosch Penang, he had his first terrifying encounter with RF while designing automotive broadcast-band receivers. He joined Avago Technologies Malaysia in 1997, where he is currently an application engineer for RF diodes, discrete transistors and MMICs. He has authored8 papers.

Related Articles

- **RF Fundamentals: Select PIN Diodes for microwave switch designs < http://www.rfdesignline.com/showarticle.jhtml;?articleid=199901353>**
- **SP2T 8 W switch targets WiMAX, base station applications < http://www.rfdesignline.com/showarticle.jhtml;?articleid=199701167>**

- A comparison of Bulk and Epitaxial PIN diodes in low cost wideband RF switching < http://www.techonline.com/showarticle.jhtml?articleid=193104083>

References

[ ] R.H. Caverly and G. Hiller, “Distortion in Microwave and RF Switches by Reverse Biased PIN Diodes”, 1989 Intl Microwave Symposium Digest, vol. III, pp. 1073-1076, June, 1989.

[2] C. Straelhi et al, “P-i-n and varactor diodes” in The Microwave Engineering Handbook, vol. 1, B. L. Smith and M. H. Carpentier, Eds. London: Chapman & Hall, 1993.

[3]GaAs MMIC Based Control Components with Integral Drivers, Macom Application Note M537 V4, pp. 3. Available: www.macom.com.

[4] R. H. Caverly and G. Hiller, Distortion Properties of MESFET and PIN Diode Microwave Switches, 1992 IEEE Microwave Symp. Digest, Vol. 2, pp. 533-536, June, 1992.

[5]E. Higham, Distortion in Voltage-Variable Attenuators, Microwave Journal, December 1999.

[6] R. H. Caverly, Distortion in RF and Microwave Control Devices, Microwave Journal, December 1997.

[7] R. H Caverly et al, “Gallium Nitride-Based Microwave and RF Control Devices”, Microwave Journal, Feb. 2001, pp. 122.

[8] R.W. Waugh. A Schottky Diode Optimized for Consistency [Online]. Available: http://www.avagotech.com.

[9] “MA4P HIPAX Series High Power PIN Diodes”, M/A-COM, Inc. Datasheet V3.00. Available: http://www.macom.com.

[10] “Ceramic MELF PIN Diodes”, Microsemi Corp., Lowell, MA. Datasheet. Available: http://www.microsemi.com.

[11] “UM9401F Surface Mount PIN Diode”, Microsemi Corp., Watertown, MA. Datasheet. Available: http://www.microsemi.com.

[12]”L709CE PIN Diode”, Litec Corp., Kyoto. Datasheet. Available: http://www.litec-corp.com.[13] I. Piper, “HMPP-3865 MiniPAK PIN Diode High Isolation SPDT Switch < http://www.rfdesignline.com/encyclopedia/defineterm.jhtml?term=switch&x=&y=> Design for 1.9 GHz and 2.45 GHz < http://www.rfdesignline.com/encyclopedia/defineterm.jhtml?term=ghz&x=&y=> Applications”, Application Note 1330, Dec. 2002, Avago Technologies, Inc. Available: http://www.avagotech.com.

[14]”Spice Library: PIN Diode Models”, Agilent Technologies, Oct. 1999. Available: http://www.hp.woodshot.com/hprfhelp/design/SPICE/pins.htm.

[15] I. Bahl, “Wire Inductors” in Lumped Elements for RF and Microwave Circuits, Artech House Inc., Boston, 2003, pp. 147.

[16] K. R. Philpot, “A Guide to Microwave Diode Package Styles and Their Performance”, High Frequency Electronics, Feb. 2005.

[17]”Applications of PIN Diodes”, Avago Technologies Application Note AN922, pp. 8-9. Available: http://www.avagotech.com.

[18] “LL1608-FSL Series Multilayer Chip < http://www.rfdesignline.com/encyclopedia/defineterm.jhtml?term=chip&x=&y=> Inductors”, Selection Guide For Fixed Inductors, Toko Inc., Tokyo, Cat. No. C094001/E2, 2005, pp. 26-27.

[10] “Applications of PIN Diodes”, Avago Technologies Application Note AN922, pp. 14-15. Available: http://www.avagotech.com.

[20] R. W. Waugh, “Diode Reliability”, presented at the Hewlett Packard Diode Seminar, Spring 1999.

[21] Appcad for **Windows < http://www.rfdesignline.com/encyclopedia/defineterm.jhtml?term=windows&x=&y=>** v.3.0.2, Available: http://www.avagotech.com

Suggested content from our partner Arrow:

Webinar: Advantages of Smart Power Distribution Unit Design for Automotive & Transportation

Whitepaper: Engineering the New Vehicle Nervous System

Webinar: Building Smarter, Safer, and Scalable Vehicles

Explore: E/E Architecture Solutions

---

0 COMMENTS ON "DESIGN A PIN DIODE SWITCH FOR HIGH-LINEA APPLICATIONS"

LEAVE A REPLY

You must **Sign in < https://aspencoreb2cprod.b2clogin.com/aspencoreb2cprod.onmicrosoft.com/B2C_1_Aspencore response_type=code&scope=openid%20offline_access&client_id=606ea8b3-c451-47e5-8db8-1aeb49207408&state=2aa509100829b1447c8ec1b7d399bc7a&redirect_uri=https%3A%2F%2Fwww connect-authorize>** or **Register < https://aspencoreb2cprod.b2clogin.com/aspencoreb2cprod.onmicrosoft.com/B2C_1_Aspencore response_type=code&scope=openid%20offline_access&client_id=606ea8b3-c451-47e5-8db8-1aeb49207408&state=61a8ab12fc514bb5e3978b7cb863a586&redirect_uri=https%3A%2F%2Fwww connect-authorize>** to post a comment.

PREVIOUS POST < HTTPS://WWW.EDN.COM/OVER-100-NEW-INDIAN-STARTUPS LAUNCHED-IN-2007/>

NEXT POST < HTTPS://WWW.EDN.COM/AMBRIC-PIXELLEXIS-TO-DEVELOP- 15444-COMPLIANT-JPEG2K-

---

PARTNER CONTENT

From AI's Origins to Smart Devices: Selecting the Right Devices for Smart Deployment <

<

https://www.eetimes.com/from-

ais-origins-to-smart-devices-selecting-the-right-devices-for-smart-deployment/> https://www.eetimes.com/from-ais-origins-to-smart-devices-selecting-the-right-devices-for-smart-deployment/>

02.27.2026

< https://www.eetimes.com/guc-announces-tape-out-of-ucie-64g-ip-on-tsmc-n3p-technology/> GUC Announces Tape-out of UCIe 64G IP on TSMC N3P Technology < https://www.eetimes.com/guc-announces-tape-out-of-ucie-64g-ip-on-tsmc-n3p-technology/>

02.26.2026

< https://www.eetimes.com/hearing-is-believing-the-unsuspected-key-to-smart-glasses-innovation/> Hearing is Believing: The Unsuspected Key to Smart Glasses Innovation < https://www.eetimes.com/hearing-is-believing-the-unsuspected-key-to-smart-glasses-innovation/>

02.26.2026

< https://aspencore.uberflip.com/i/1542944-electronic-products-january-february-2026/0?>

< https://www.edn.com/edn-announces-winners-of-the-2025-product-of-the-year-awards/>

Advertisement

Ad

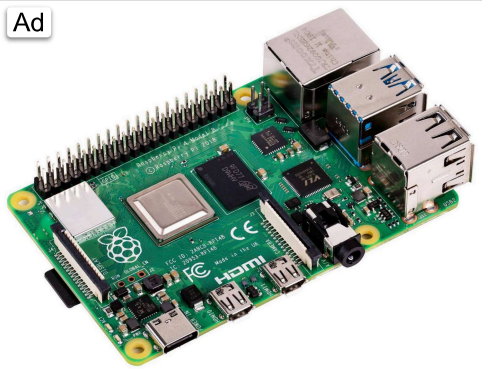

Raspberry-Pi RPI4-MODBP-2GB Soc...

$55 Soc Type:Broadcom Bcm2711; Core Type:Cortex-A72 (Arm V8) 64-Bit; No. Of Cores:4Cores;...

Newark

Visit Site

Advertisement

Recent Posts

USB-C and Power Delivery: Too much of a good thing? < https://www.edn.com/usb-c-and-power-delivery-too-much-of-a-good-thing/> / **Scope boosts high-speed interface validation < https://www.edn.com/scope-**

boosts-high-speed-interface-validation/> / GaN half-bridge simplifies 650-V power stages < https://www.edn.com/gan-half-bridge-simplifies-650-v-power-stages/>

Archives

Select Month

Categories

Select Category

Search …

SEARCH

Recent Comments

Brian Dipert on **Preemptive utilities shutdown oversight: Too much, too little, or just right? < https://www.edn.com/preemptive-utilities-shutdown-oversight-too-much-too-little-or-just-right/#comment-35028>**

911ENGR on **Preemptive utilities shutdown oversight: Too much, too little, or just right? < https://www.edn.com/preemptive-utilities-shutdown-oversight-too-much-too-little-or-just-right/#comment-35027>**

asa70 on **An LM317-based 0-20mA to 4-20mA 2-wire converter < https://www.edn.com/an-lm317-based-0-20ma-to-4-20ma-2-wire-converter/#comment-35026>**

Advertisement

Do Not Sell or Share My Personal Information